TYPE A Package Manufacturer's Certification

1. Product Model/Description: TI, TI-F, TI-FF

2. Package Specifications/Limitations: The TI Series packages are a stainless steel construction containing a depleted uranium shield. When fully assembled, the TI package measures 252 mm long x 110 mm wide x 156 mm high. The TI-F package measures 257 mm long x 110 mm wide x 167 mm high. Lastly, the TI-FF measures 261 mm long x 120 mm wide x 177 mm high.

Transport as Type A for these packages is <u>not approved in the United States.</u> This Type A documents compliance with the IAEA standards noted below and not the USA regulations.

3. Special Form Source Assemblies Authorized for Transport

Type A Approved Activity (Max.)	Isotope	Source Assembly Model Number
27 Ci (1 TBq)	Ir-192	G4, G6, IR004 and 875XX Inner

4. References: AR/PDSR/0003/GammaMat TI/TK Packages (Rev. 3)

5. Drawing/Assembly Description: Assembly as shown on page 2 of this certificate

6. Maintenance and Operational Controls: SI14050.CON Revision 7 (May 2024)

7. Max Weight of Package: TI: 28.6 lb. (13 kg); TI-F: 35.3 lb. (16 kg); TI-FF: 40.8 lb. (18.5 kg)

8. Package Closures: The shutter ring must be rotated into the "CLOSED" position and the safety lock must be engaged. The connectors must be covered with the protective plug on the front and rear protective caps. The key for the safety lock must be kept separate from the container. The safety lock serves as the tamper indicating seal for the package.

Under §173.415, QSA Global Inc. certifies that the package and contents described above comply with relevant requirements for a Type A package under the International Atomic Energy Agency Regulations for the Safe Transport of Radioactive Material, 2009 Edition [No. TS-R-1] & 2018 Edition [No. SSR-6].

All documentation of tests, engineering evaluation or comparative data demonstrating compliance of this package design to Type A Specification 7A shall be maintained by QSA Global, Inc. and will be available to regulators upon request.

The shipper is responsible for ensuring the packaging conforms fully to the requirements identified on this certification including the assembly, maintenance and operational control requirements specified in Sections 5 & 6. Changes to the package assembly, shipment of material not specified on this certificate or any other non-compliance with the requirements of this certificate are not supported under this certification and will invalidate this Type A approval.

E-SIGNED by Mary Flanigan
on 2024-12-04 15:25:42 GMT

Regulatory Signature

December 04, 2024

Date
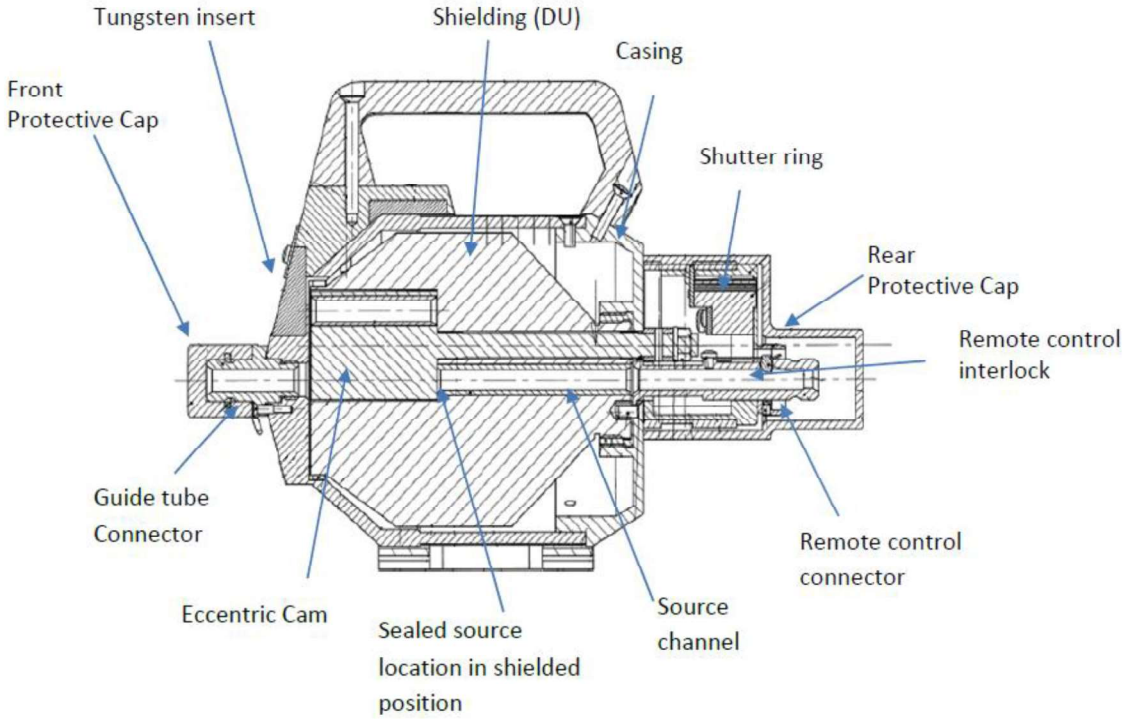
TYPE A Package Manufacturer's Certification