TYPE A Package Manufacturer's Certification

1.	**Product Model/Description:** 959A with Model 959M Type A Package
2.	**Package Specifications/Limitations:** Package consists of a Model 959M SCAR Projector in a 959A Shipping/Storage case with main insert and optional foam insert for case lid. Fully assembled the package measures 13 3/8" x 11 5/8" x 6".
3.	**Special Form Source Assemblies Authorized for Transport**

Type A Approved Activity (Max.)	Isotope	Source Assembly Model Number
15 Ci (555 GBq)	Ir-192, Special Form	875 Style Inner
81 Ci (3TBq)	Se-75, Special Form	X540/1

4.	**References:** ERF 535, TP Report 153, TP Report 54 (with addendum), TP Report 53, TP Report 26 (with addendums), TP Report 210, Technical Report No. 423, Memorandum for Optional Lid Foam Used Dated 2/3/2013, and Drawing R959M90 and R95900.
5.	**Drawing/Assembly Description:** Assembly as shown on this certificate.
6.	**Maintenance and Operational Controls:** MAN-033
7.	**Max Weight of Package:** 41 lbs (18.6 kg)
8.	**Package Closures:** 959M with source in stored position and plunger lock engaged. Install 959M in 959A case. Close case latches, rotate "O" ring seal to provide airtight closure and fasten security padlock through one of the two closure holes on the case. Attach a wire to the other unoccupied closure hole to serve as a tamper indicating seal.

Under §173.415, QSA Global Inc. certifies that the package and contents described above comply with relevant requirements for a Type A package under the International Atomic Energy Agency Regulations for the Safe Transport of Radioactive Material, 2009 Edition [No. TS-R-1] & 2018 Edition [No. SSR-6], and USDOT Specification 7A under USDOT 49 CFR 178.350.

All documentation of tests, engineering evaluation or comparative data demonstrating compliance of this package design to Type A Specification 7A shall be maintained by QSA Global, Inc. and will be available to regulators upon request.

The shipper is responsible for ensuring the packaging conforms fully to the requirements identified on this certification including the assembly, maintenance and operational control requirements specified in Sections 5 & 6. Changes to the package assembly, shipment of material not specified on this certificate or any other non-compliance with the requirements of this certificate are not supported under this certification and will invalidate this Type A approval.

E-SIGNED by Lori Podolak on 2025-01-02 12:22:31 GMT

Regulatory Signature

January 02, 2025

Date

TYPE A Package Manufacturer's Certification

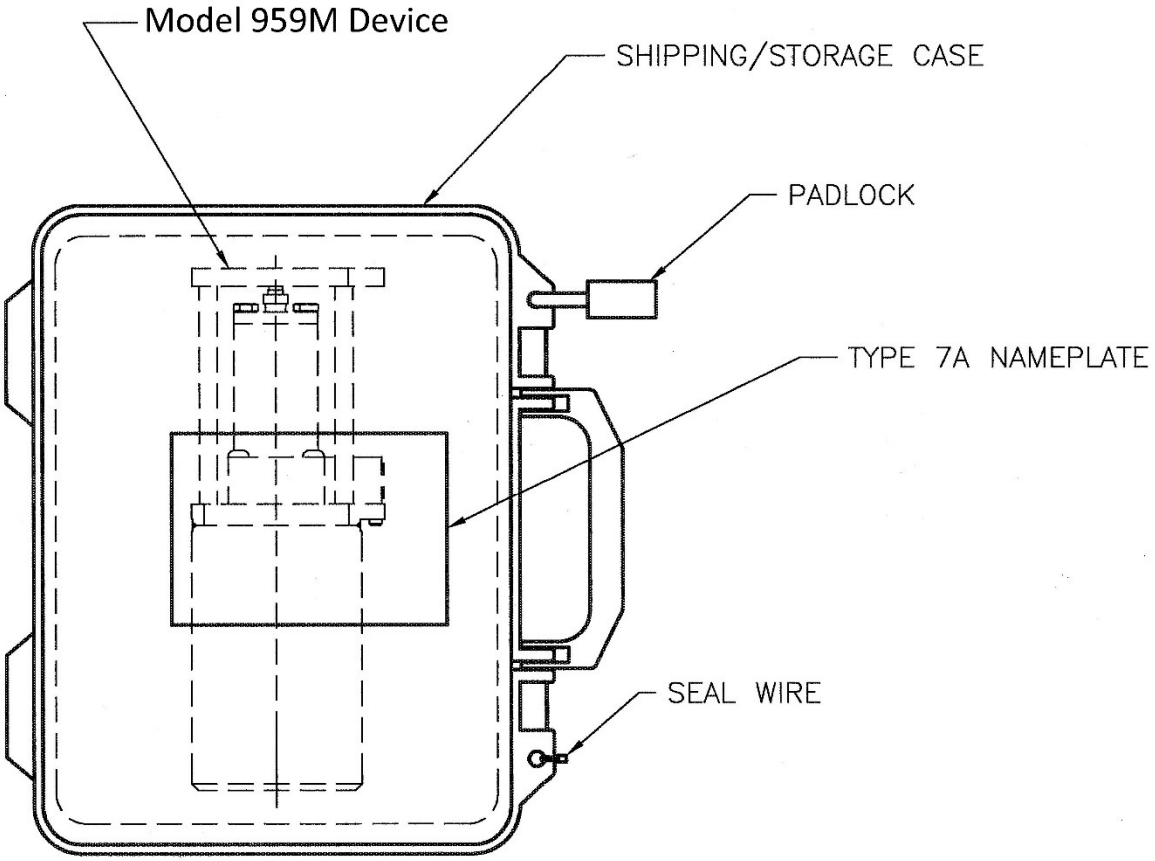

Model 959A Type A Package with 959M

All replacement components for the package MUST be obtained from QSA Global Inc.
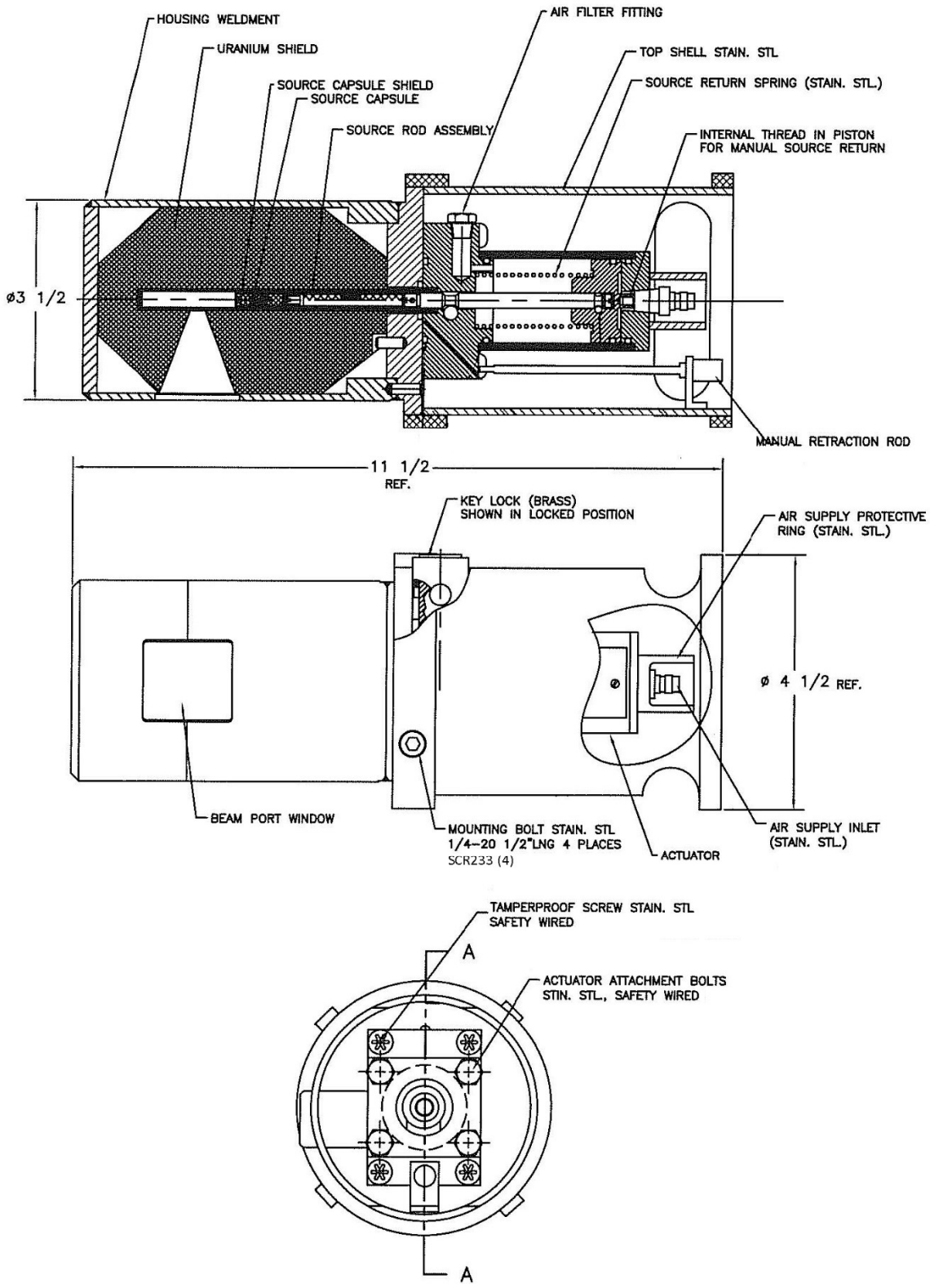
TYPE A Package Manufacturer's Certification